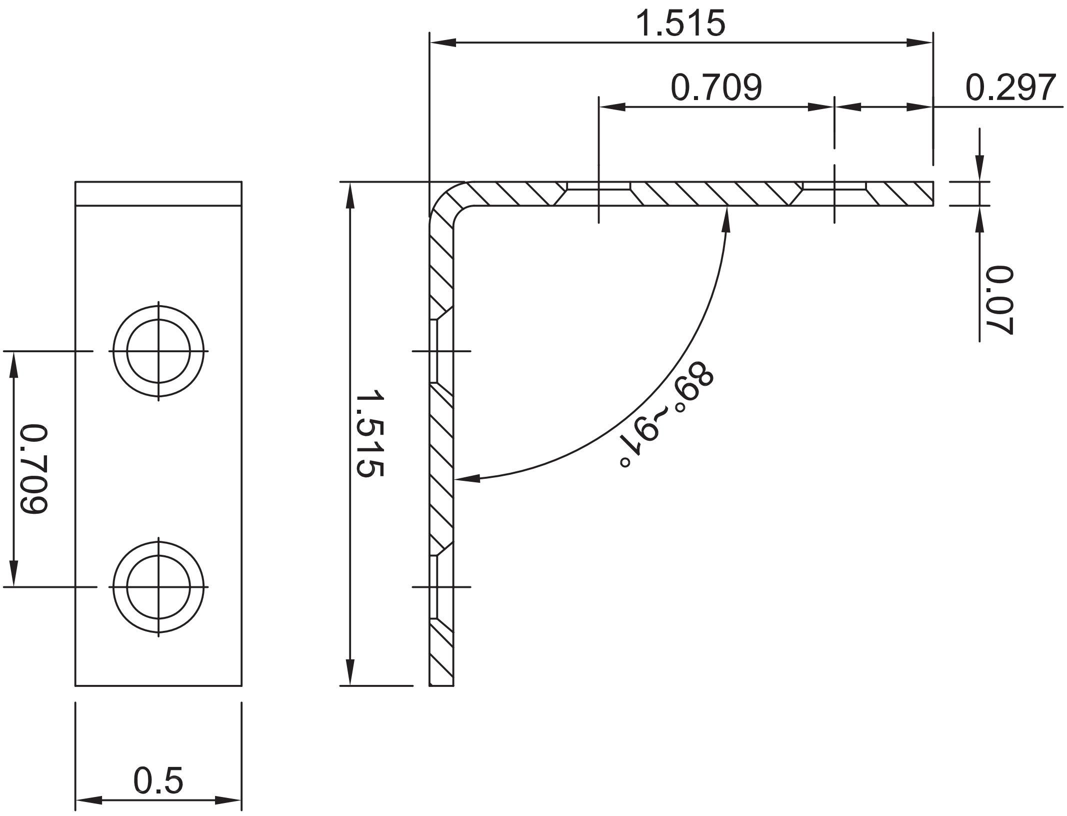

Corner Brace1.5"x1/2"
97GA15R

MARKER	COUNT	AREA	REVISION	APPROVE	DATE
DRAWING			STANDIZATION		
DESIGNING					
CHECK					
TECHNICS			APPROVE		

REVISION	WEIGHT	SCALE	DRAWING NO.	PROJECTION
			MATERIAL	UNITS
				inch
			FINISH	TOLERANCE