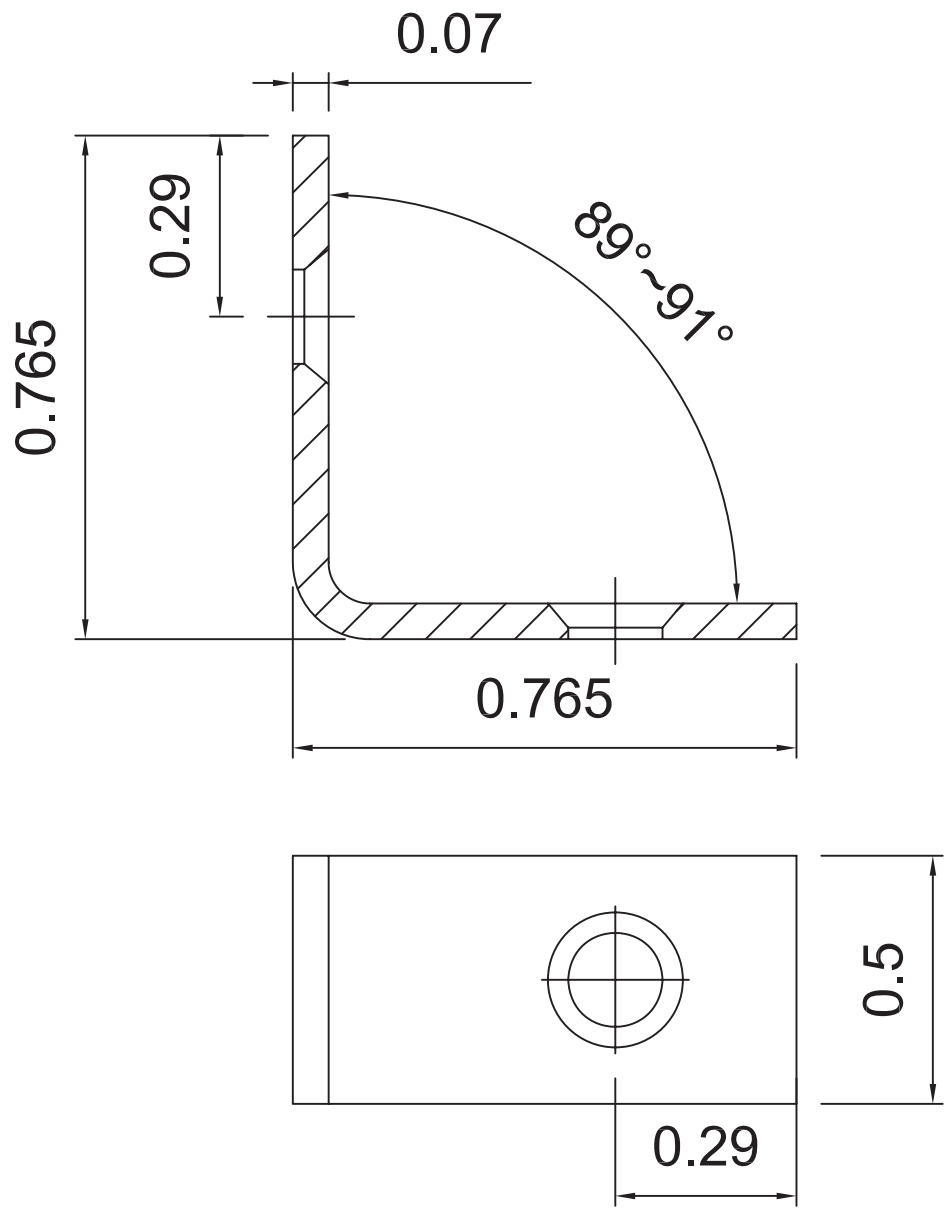

						3/4" Corner Brace 97X07B						
MARKER	COUNT	AREA	REVISION	APPROVE	DATE							
DRAWING			STANDIZATION			REVISION	WEIGHT	SCALE	DRAWING NO.		PROJECTION	
DESIGNING									MATERIAL		UNITS	inch
CHECK												
TECHNICS			APPROVE						FINISH		TOLERANCE	