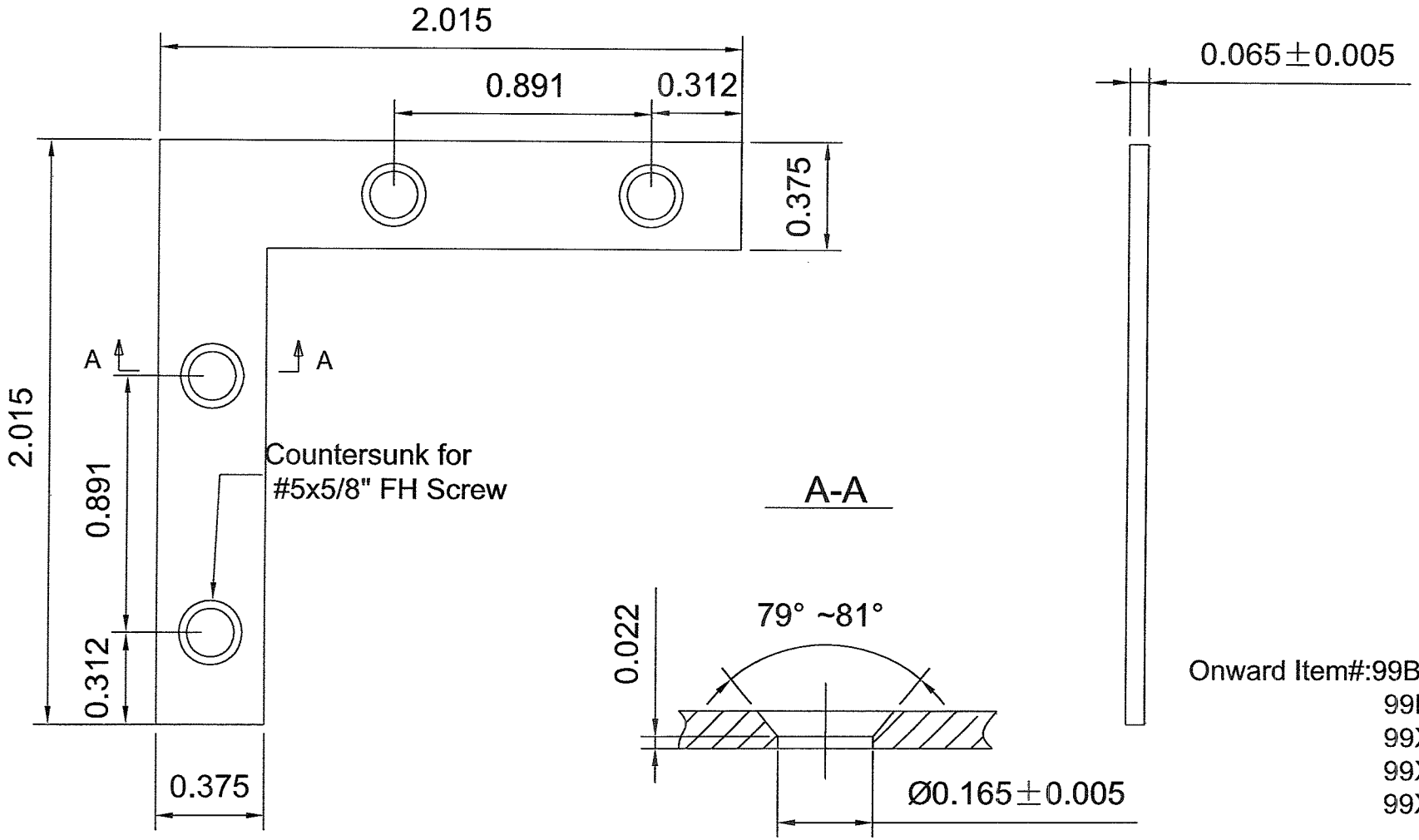

Onward Item#:99B20-B
99B20-R
99X20-B
99X20-BC
99X20-R

Tolerance
All Tolerance unless
otherwise noted : ±0.015"

						Flat Corner Brace 2"x3/8"						
MARKER	COUNT	AREA	REVISION	APPROVE	DATE							
DRAWING			STANDIZATION			REVISION	WEIGHT	SCALE	DRAWING NO.		PROJECTION	
DESIGNING									MATERIAL		UNITS	
CHECK												
TECHNICS			APPROVE			TOTAL 1 PAGE NO.1 PAGE			FINISH		TOLERANCE	